COMPATIBLE MOTOR DIMENSIONS							
A	B	C	D	E	F	H	L
≦24	110	≦55.3	≦9	145	8.1~10.0	120~140	≧C-10

※BUSHING WILL BE SUPPLIED WHEN THE MOTOR SHAFT DIAMETER IS SMALLER THAN 24

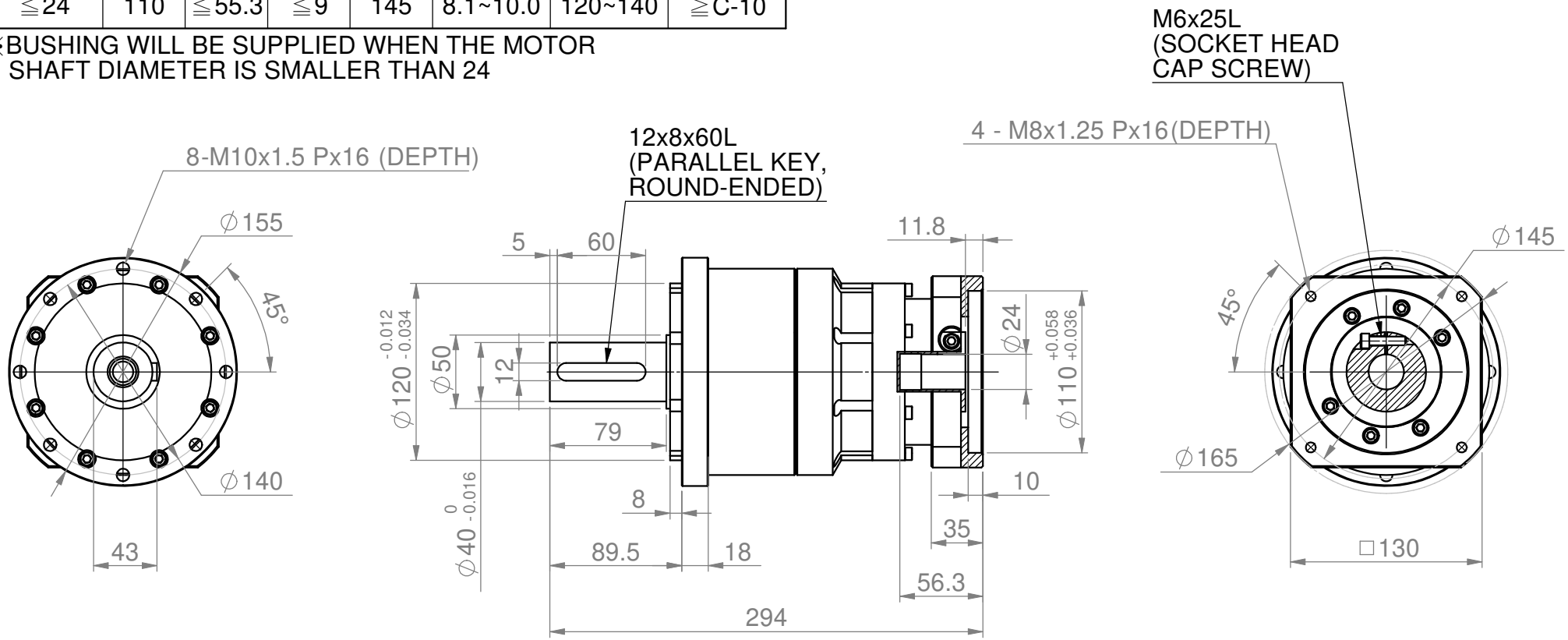

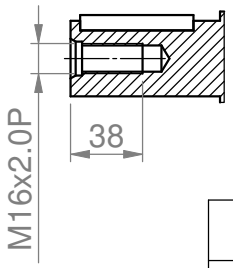

ADAPTER PART No
234BC45310

SPECIFICATIONS ARE SUBJECT TO CHANGE WITHOUT PRIOR NOTICE

Unit	mm	Model Name	PGCH155T 2 STAGE
Project		Drawing No.	6C5XT.110130.142

SESAME

SESAME MOTOR CORP.